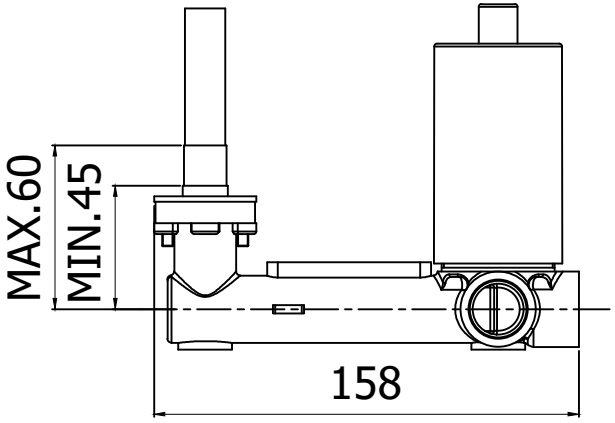
MAX.60
MIN.45
158

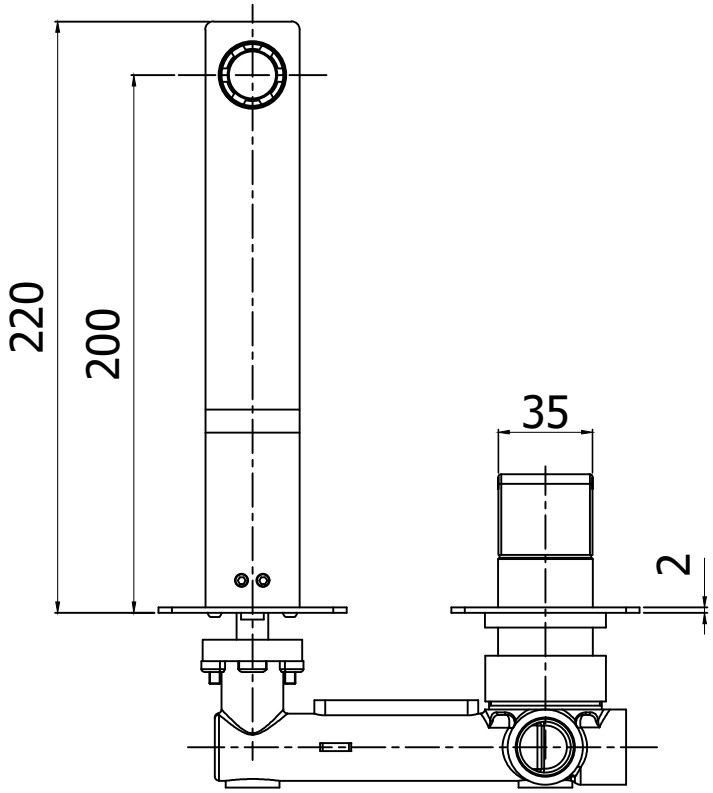
220
200
35
2

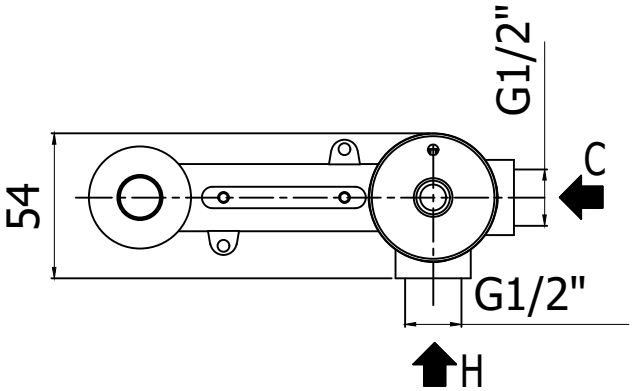
G1/2"
C
54
G1/2"
H

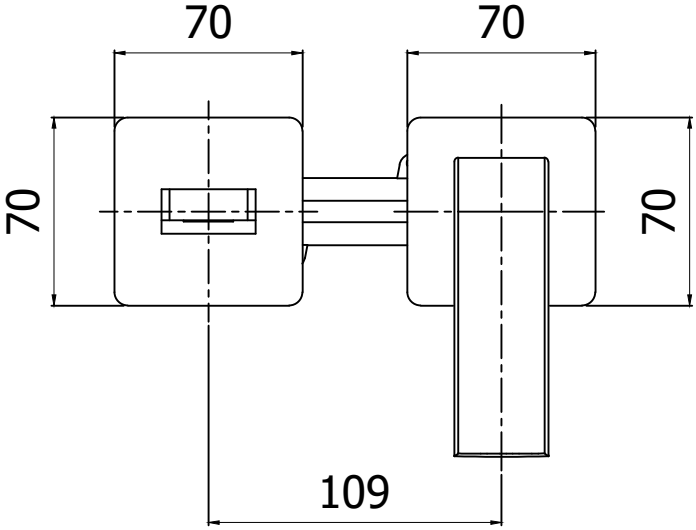
70
70
70
70
109