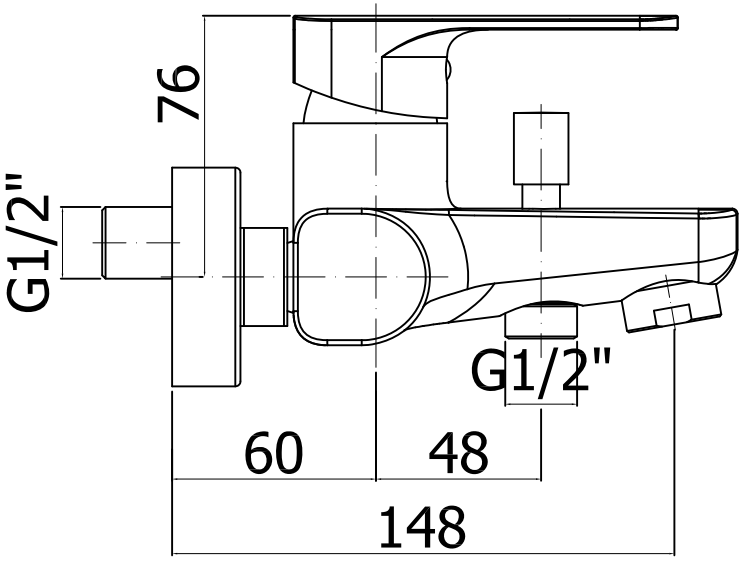
76
G1/2"
G1/2"
60
48
148

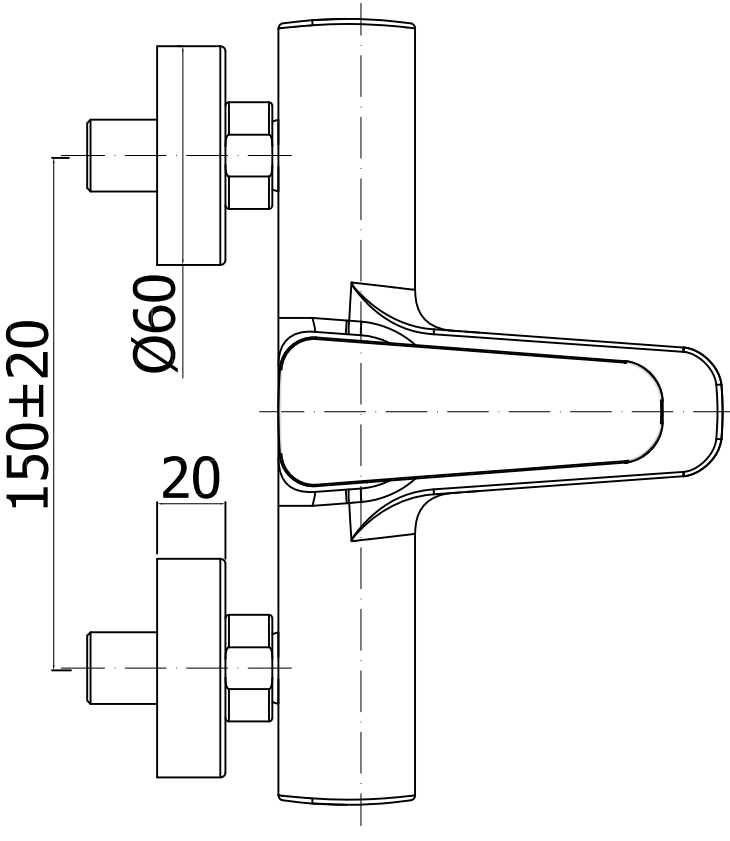
Ø60
150±20
20