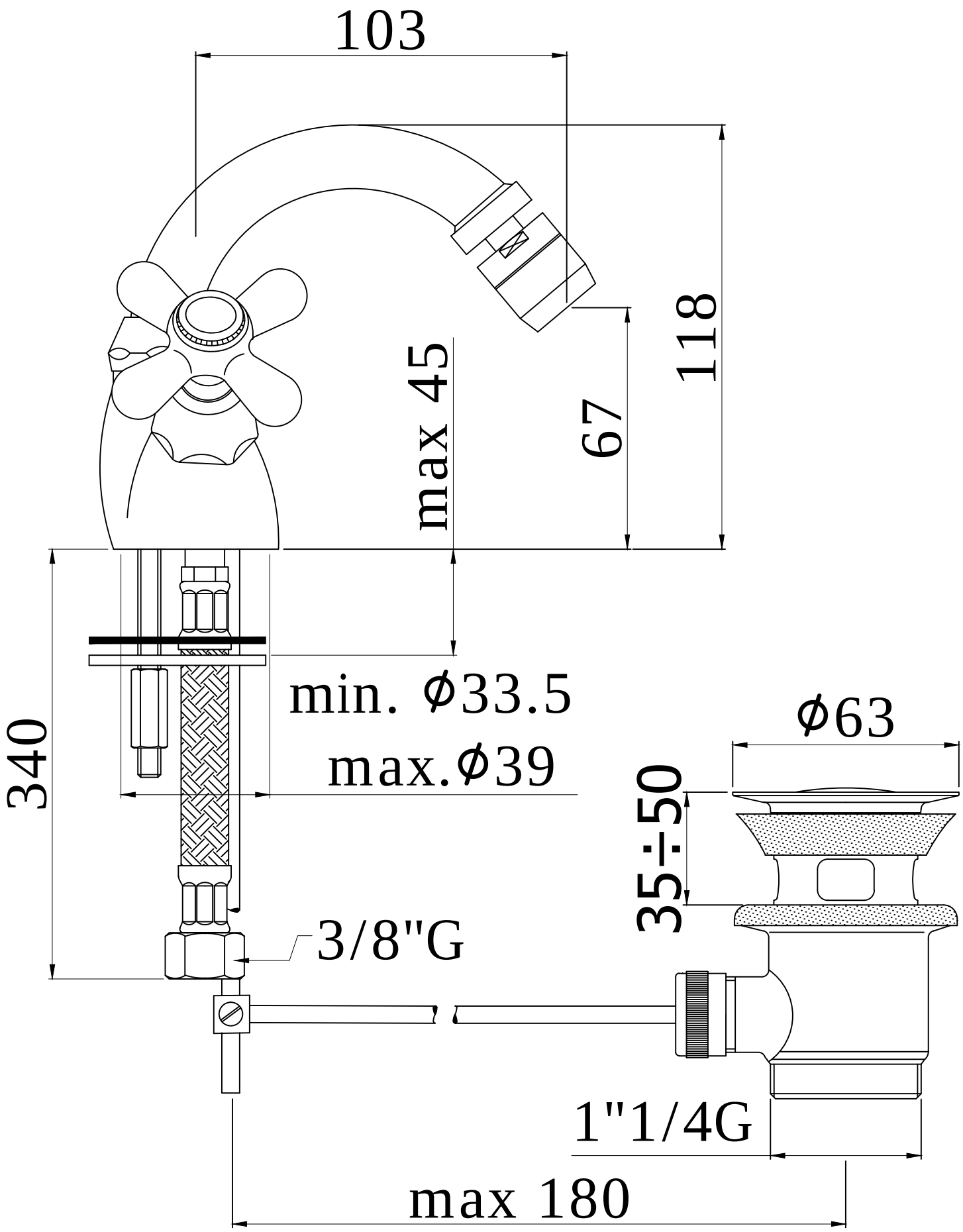
103
118
67
max 45
min. Ø33.5
max.Ø39
340
Ø63
35÷50
3/8"G
1"1/4G
max 180