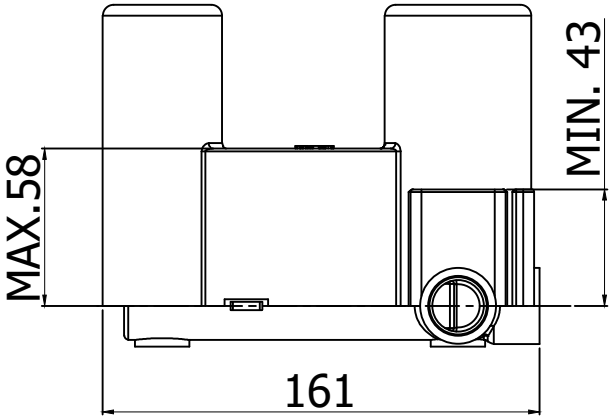
MAX.58
MIN. 43
161

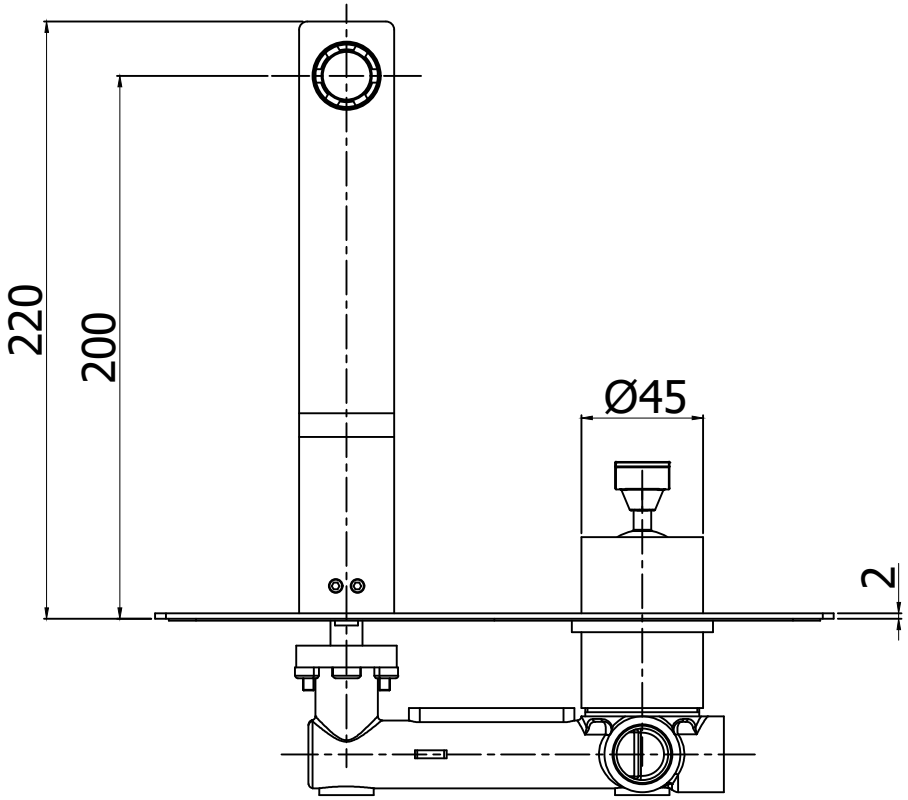
220
200
Ø45
2

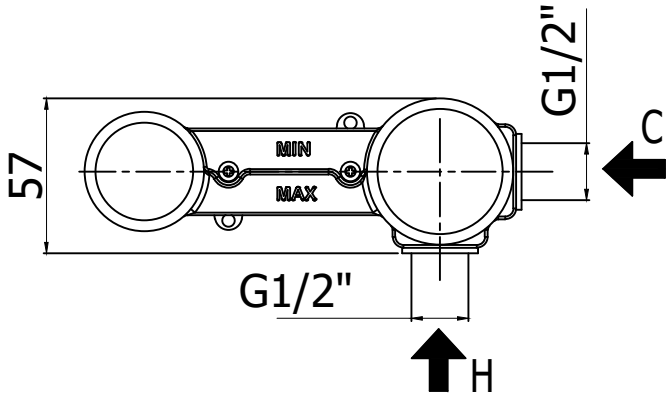
57
MIN
MAX
G1/2"
C
G1/2"
H

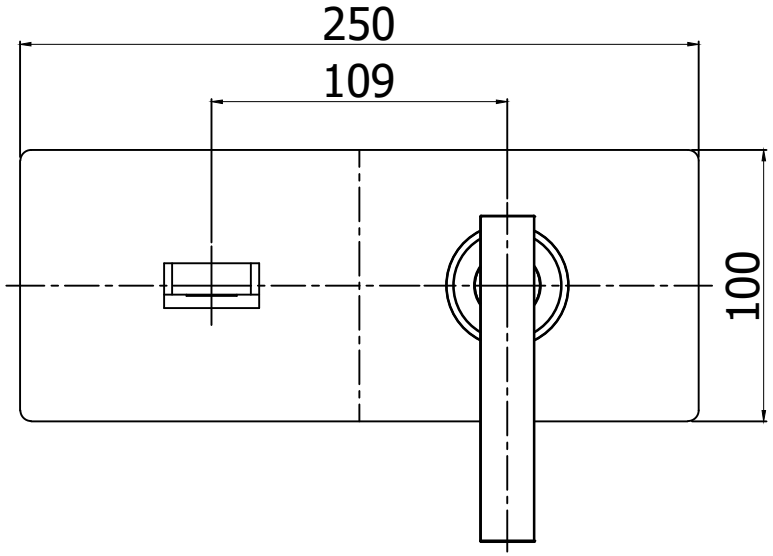
250
109
100