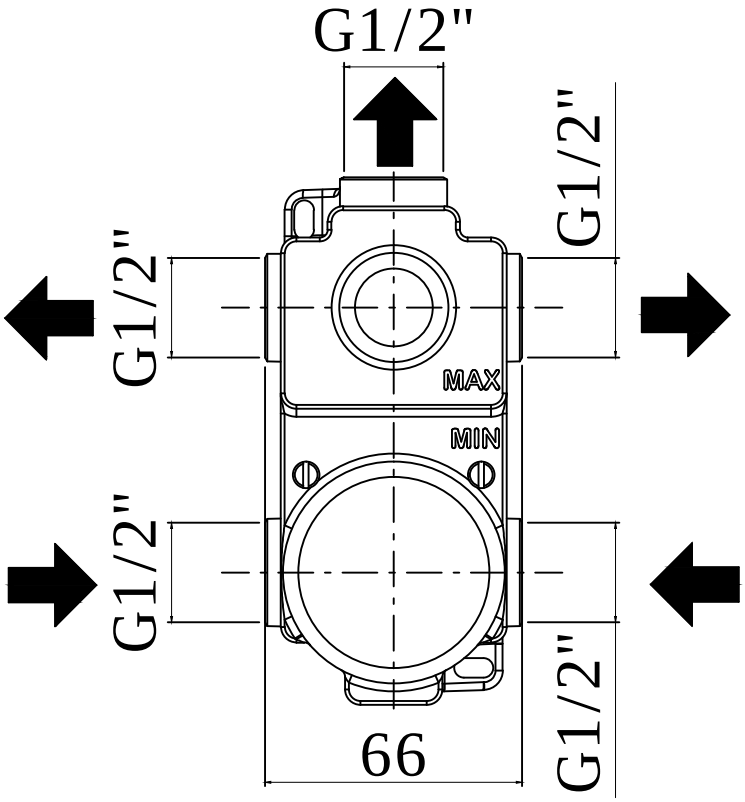
G1/2"
G1/2"
G1/2"
G1/2"
G1/2"
MAX
MIN
66

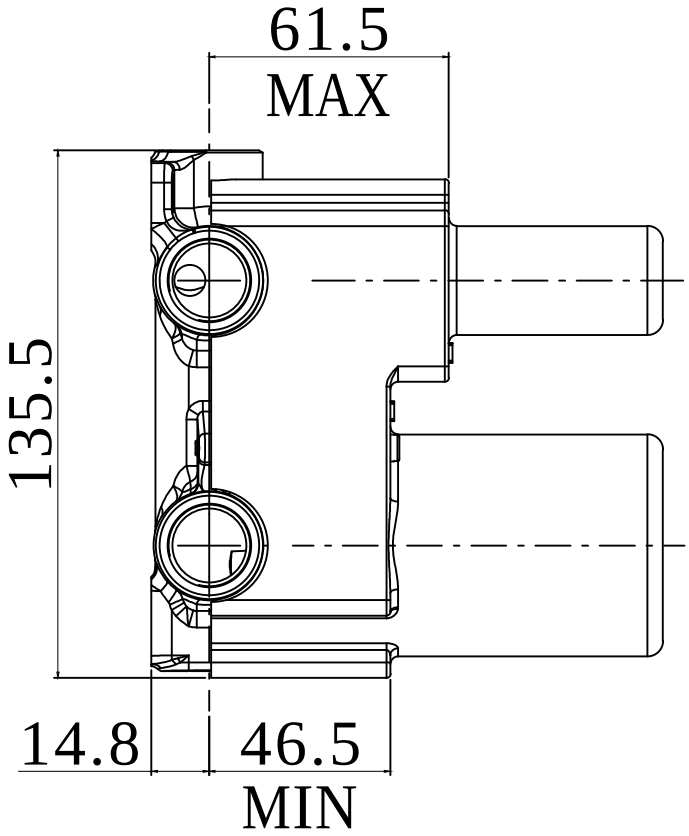
61.5
MAX
135.5
14.8
46.5
MIN

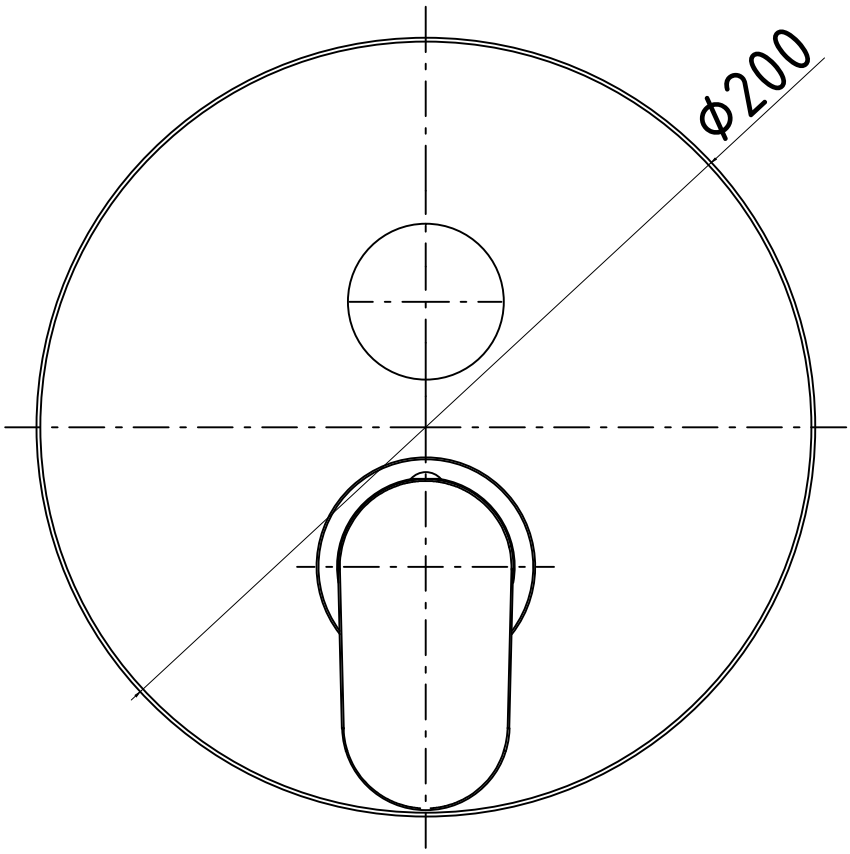
Ø200

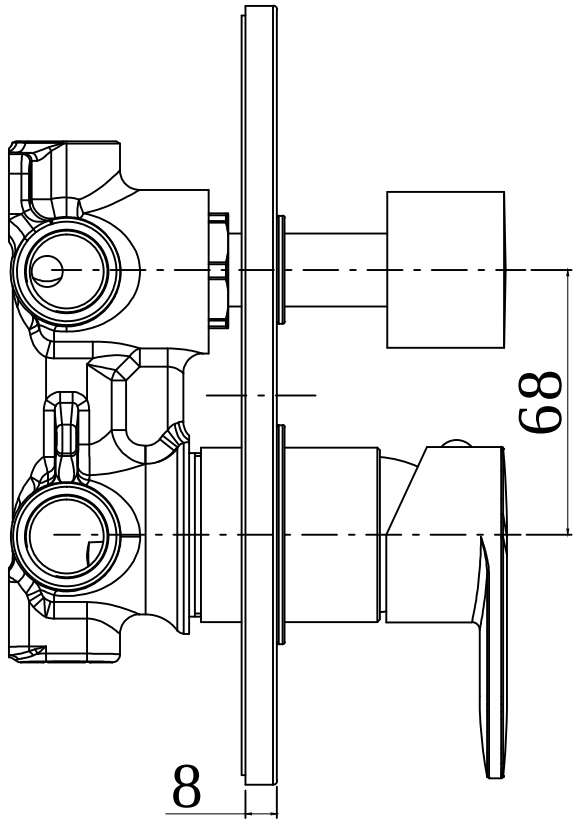
68
8