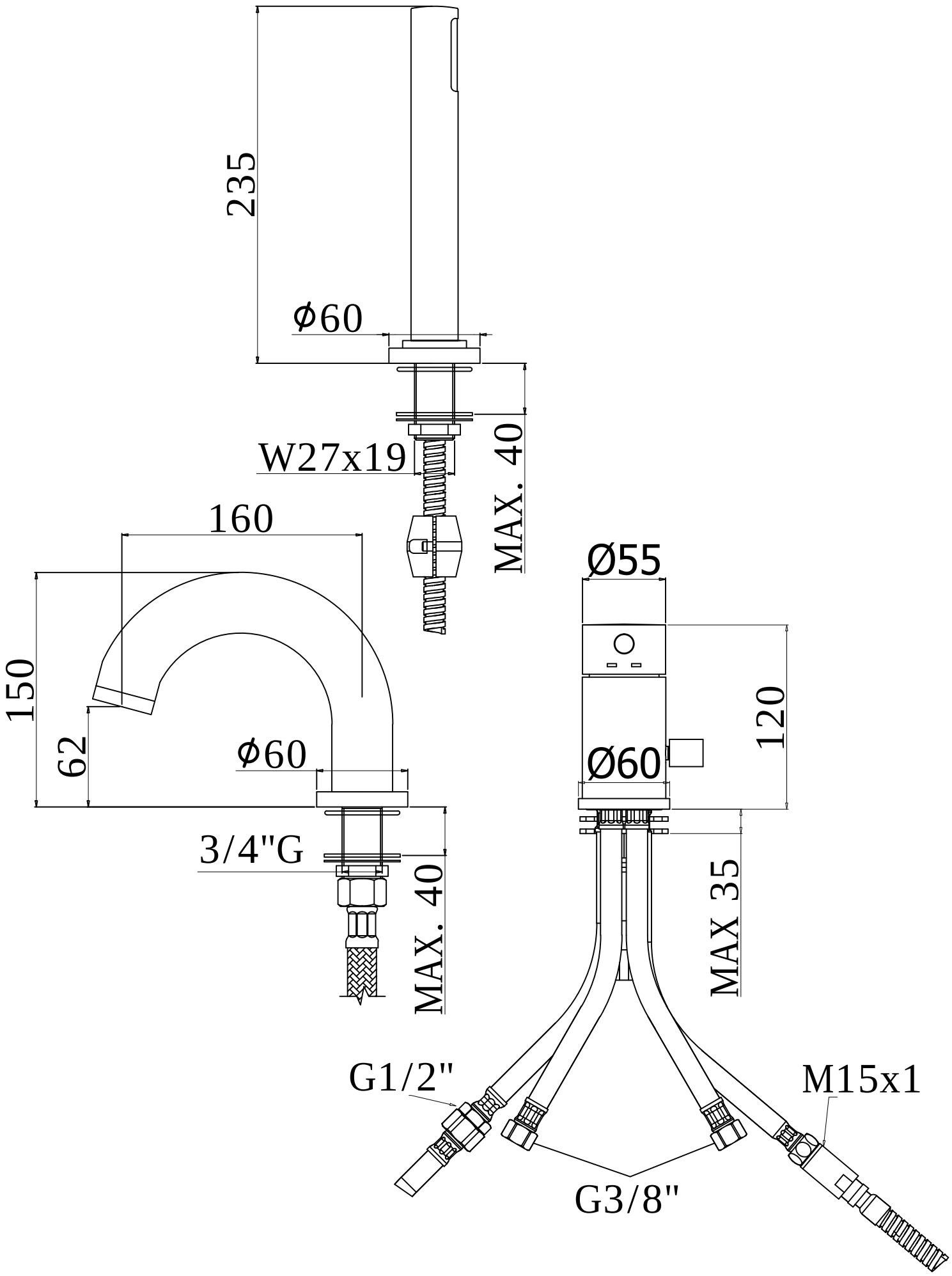
235
ϕ60
W27x19
MAX. 40
160
150
62
ϕ60
3/4"G
MAX. 40
Ø55
120
Ø60
MAX 35
G1/2"
M15x1
G3/8"